ARES IP

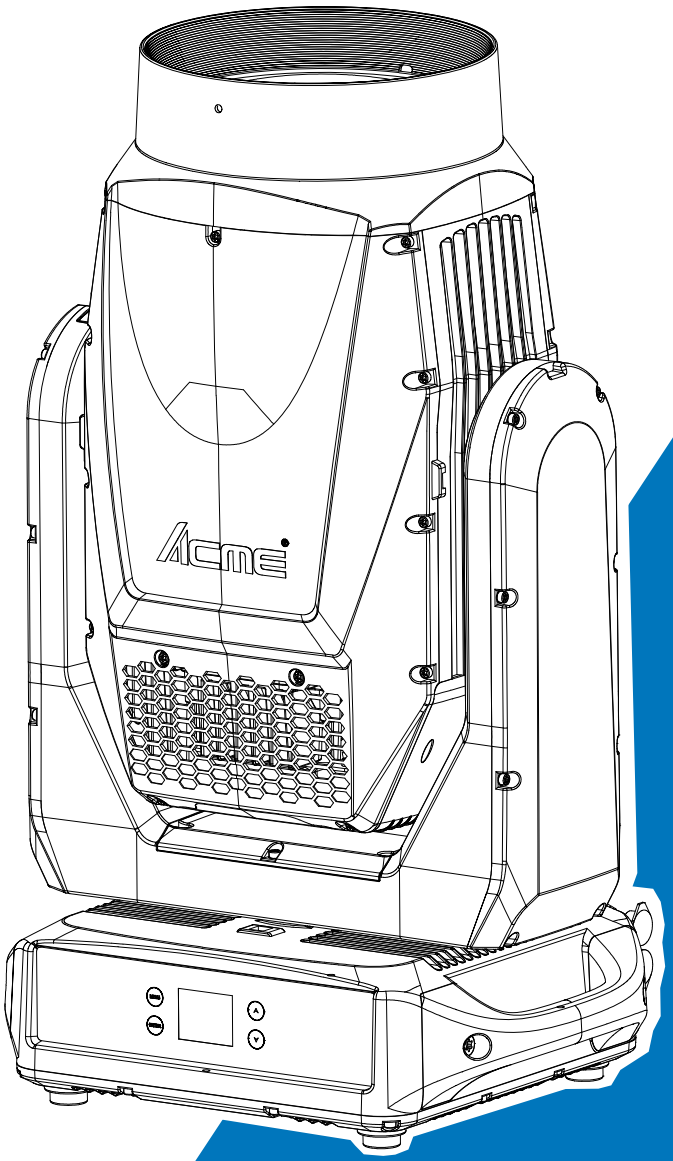

User Manual

Please read the instruction carefully before use

CONTENTS

01/ Safety Information 2
02/ Technical Specifications 8
03/ Overview 10
3.1 Battery Power 11
04/ Connecting Power and Data 13
4.1 Connecting Power 13
4.2 Connecting Data 14
05/ Fixture Installation 15
06/ Effect Wheels & Lamp 18
6.1 Effect Wheels 18
6.2 Light Source 18
6.3 Lamp Replacement Warning 19
07/ Operation 19
7.1 Control Menu 19
7.2 Updating Software 33
7.3 Home Position Adjustment 36
08/ Configuring the Device for DMX Control 40
8.1 Address Setting 40
8.2 DMX Protocol 41
09/ Error Information 47
10/ Troubleshooting 57
11/ Fixture Cleaning 58
12/ Approvals and Certifications 59

01/ Safety Information

Please read the instruction carefully which includes important information about the installation, usage and maintenance.

WARNING

Please keep this User Manual for future consultation. If you sell the unit to another user, be sure that they also receive this instruction manual.

Important:

Damages caused by the disregard of this user manual are not subject to warranty. The dealer will not accept liability for any resulting defects or problems.

- Unpack and check carefully to ensure that there is no transportation damage before using the unit.
- This product is suitable for wet locations. Do not immerse in water.
- DO install and operate by qualified operator.
- DO NOT allow children to operate the fixture.
- Use safety chain when fixing the unit. Handle the unit by carrying its base instead of the head only.
- The unit must be installed in a location with adequate ventilation, at least 50cm from adjacent surfaces.
- Be sure that no ventilation holes are blocked, otherwise the unit could over heat.
- Before operation, ensure that you are connecting this product to the proper voltage in accordance with the specifications in this manual or on the product's specification label.
- It's important to ground the yellow/green conductor to earth in order to avoid electric shock.
- Minimum ambient temperature TA: -10˚C. Maximum ambient temperature TA: 40˚C. Do not operate this product at a lower or higher temperature.
- DO NOT connect the device to any dimmer pack.
- During initial start-up some smoke or smell may arise. This is a normal process and does not necessarily mean that the device is defective, and it will decrease gradually within 15 minutes.
- Keep flammable materials away from the fixture while operating to avoid fire hazard.
- Make sure the power cord is not crimped or damaged; replace it immediately if damaged.

- Unit's surface temperature may reach up to 75℃. DO NOT touch the housing bare-handed during its operation.
- Avoid any flammable liquids, water or metal from entering the unit. If it happens, cut off the mains power immediately.
- DO NOT operate in a dirty or dusty environment. DO clean the fixture regularly.
- DO NOT touch any wiring during operation as there might be a hazard of electric shock.
- Avoid entanglement of the power cord with other wires.
- The minimum distance to objects/surface must be more than 12 meters.
- Disconnect mains power before lamp replacement or servicing.
- Replace lamp only with the same type.
- In the event of an operating problem, stop using the unit immediately.
- Never turn the unit off and on repeatedly.
- The housing, the lenses, or the ultraviolet filter must be replaced if they are visibly damaged.
- DO NOT open the housing as there are no user serviceable parts inside.
- DO NOT attempt to operate this unit if it becomes damaged. DO NOT attempt any repairs yourself. Repairs carried out by unskilled people can lead to damage or malfunction. Please contact the nearest authorized technical assistance center if needed.
- Disconnect this product from its power source before servicing.
- DO use the original packaging or suitable road case if the device is to be transported.
- Check that the head tilt lock is released before packing for transportation.
- Hot lamp explosion hazard. DO NOT open the unit within 15 minutes after switching off.
- DO replace the bulb once it is damaged, deformed or life-expired.
- Avoid direct eye exposure to the light source while the product is on.
- Never touch bulb with bare fingers, as it is very hot after using.
- DO NOT operate this product if you see damage on the housing, shields, or cables. Have the damaged parts replaced by an authorized technician at once.
- The device MUST NOT be switched on immediately if it has been exposed to strong temperature fluctuations (e.g. after transport) as condensation may occur inside. Please leave the device switched off until it has reached to ambient temperature.

- External sources of light beams from direct sunlight or any other strong light source, which penetrate the front lens of lighting fixtures, can cause severe internal damage. DO NOT expose the fixture front lens to light beams from direct sunlight or any other strong light source from any angle while unpacking, installation, use, and extended idle times outdoors. DO NOT focus a light beam from one lighting fixture directly towards another.

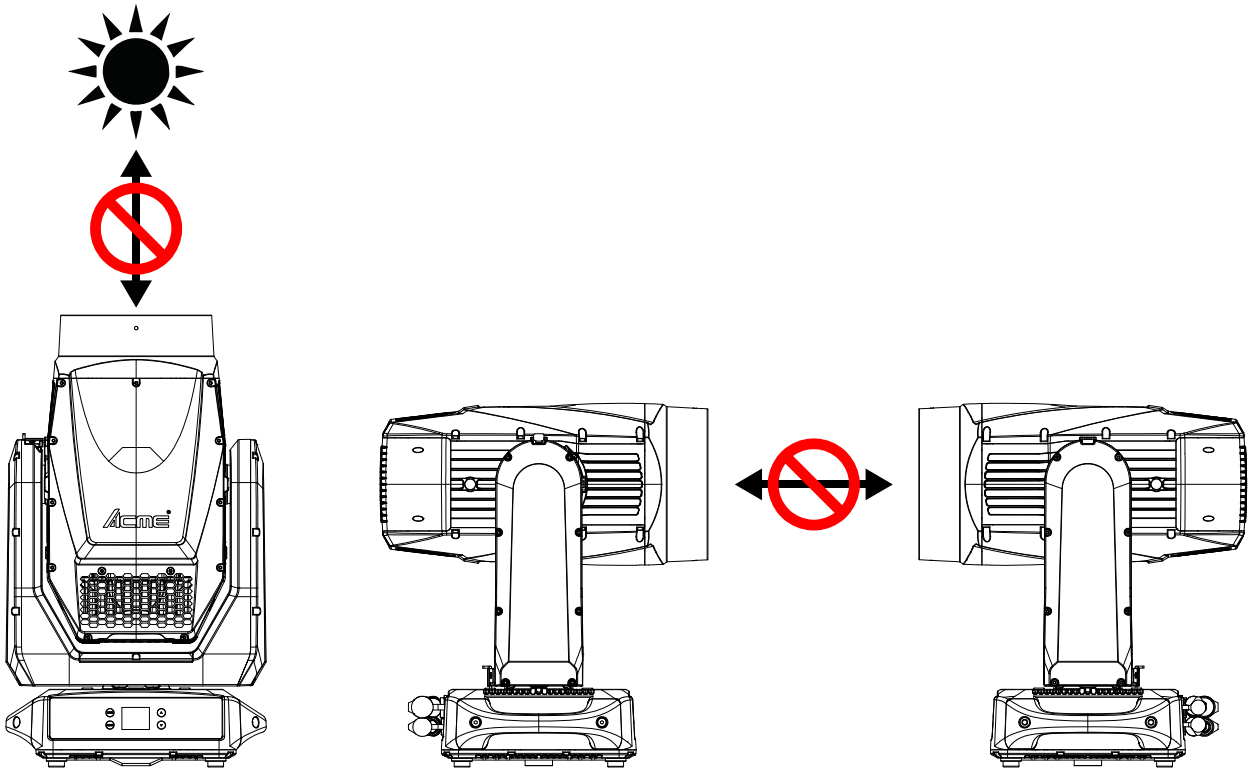

01/ Informations de sécurité

AVERTISSEMENT

Veuillez lire attentivement les instructions, car elles contiennent des informations importantes concernant l'installation, l'utilisation et la maintenance.

Veuillez conserver ce manuel d'utilisation pour consultation future. Si vous vendez l'appareil à un autre utilisateur, assurez-vous qu'il reçoive également ce manuel d'instructions.

Important:

Les dommages causés par le non-respect de ce manuel d'utilisation ne sont pas couverts par la garantie. Le revendeur n'acceptera aucune responsabilité pour les défauts ou problèmes qui en résulteraient.

- Déballer et vérifier soigneusement qu'il n'y a pas de dommages dus au transport avant d'utiliser l'appareil.
- Ce produit est adapté aux endroits humides. Ne pas immerger dans l'eau.
- FAIRE installer et utiliser par un opérateur qualifié.
- NE PAS laisser les enfants manipuler l'appareil.
- Utiliser une chaîne de sécurité lors de la fixation de l'appareil. Manipuler l'appareil en portant sa base et non uniquement par la tête.
- L'appareil doit être installé dans un endroit bien ventilé, à au moins 50 cm des surfaces adjacentes.
- Assurez-vous qu'aucune fente de ventilation n'est obstruée, sinon l'appareil surchauffera.
- Avant utilisation, assurez-vous de connecter ce produit à la tension appropriée conformément aux spécifications de ce manuel ou à l'étiquette des spécifications du produit.
- Il est important de mettre le conducteur jaune/vert à la terre pour éviter tout risque de choc électrique.
- Temp é rature ambiante minimale (TA): -10˚C. Temp é rature ambiante maximale (TA): 40˚C. Ne pas utiliser ce produit à une temp é rature inf é rieure ou sup é rieure.
- NE PAS connecter l'appareil à un gradateur (dimmer pack).
- Lors de la mise en route initiale, de la fumée ou une odeur peut se dégager. Ce processus est normal et ne signifie pas nécessairement que l'appareil est défectueux. Cela diminuera progressivement dans les 15 minutes.

- Éloigner les matériaux inflammables de l'appareil pendant son fonctionnement pour éviter tout risque d'incendie.
- Vérifier que le cordon d'alimentation n'est ni écrasé ni endommagé; le remplacer immédiatement s'il est endommagé.
- La température de surface de l'appareil peut atteindre jusqu'à 75℃. NE PAS toucher le boîtier à mains nues pendant son fonctionnement.
- Évitez que des liquides inflammables, de l'eau ou des objets métalliques ne pénètrent dans l'appareil. Si cela se produit, coupez immédiatement l'alimentation électrique.
- NE PAS utiliser l'appareil dans un environnement sale ou poussiéreux. Nettoyez régulièrement l'appareil.
- NE PAS toucher de fils pendant le fonctionnement, car cela pourrait présenter un risque de choc électrique.
- Évitez que le cordon d'alimentation ne s'emmêle avec d'autres fils.
- La distance minimale par rapport aux objets/surfaces doit être de plus de 12 mètres.
- Débranchez l'alimentation électrique avant de remplacer la lampe ou d'effectuer toute maintenance.
- Remplacez la lampe uniquement par un modèle de même type.
- En cas de problème de fonctionnement grave, cessez immédiatement d'utiliser l'appareil.
- Ne jamais allumer et éteindre l'appareil à plusieurs reprises.
- Le boîtier, les lentilles ou le filtre ultraviolet doivent être remplacés s'ils sont visiblement endommagés.
- NE PAS ouvrir le boîtier, car il ne contient aucune pièce pouvant être réparée par l'utilisateur.
- NE PAS tenter d'utiliser cet appareil s'il est endommagé. NE PAS tenter de réparations vous-même. Les réparations effectuées par des personnes non qualifiées peuvent entraîner des dommages ou un dysfonctionnement. Veuillez contacter le centre d'assistance technique agréé le plus proche si nécessaire.
- Débranchez l'appareil de sa source d'alimentation avant toute maintenance.
- UTILISEZ l'emballage d'origine si l'appareil doit être transporté.
- Vérifiez que le verrou d'inclinaison de la tête est libéré avant l'emballage pour le transport.

- Risque d'explosion de la lampe chaude. NE PAS ouvrir l'appareil dans les 15 minutes suivant son extinction.
- REMPLACEZ l'ampoule si elle est endommagée, déformée ou en fin de vie.
- Évitez une exposition directe des yeux à la source lumineuse lorsque l'appareil est allumé.
- Ne jamais toucher l'ampoule à mains nues, car elle est très chaude après utilisation.
- NE PAS utiliser ce produit si vous constatez des dommages sur le boîtier, les protections ou les câbles. Faites remplacer les pièces endommagées par un technicien agréé immédiatement.
- L'appareil NE DOIT PAS être allumé immédiatement s'il a été exposé à de fortes variations de température (par exemple après un transport), car de la condensation pourrait se former à l'intérieur. Veuillez laisser l'appareil éteint jusqu'à ce qu'il ait atteint la température ambiante.
- Les sources externes de rayons lumineux, comme la lumière directe du soleil ou toute autre source lumineuse intense, qui pénètrent à travers la lentille frontale des appareils d'éclairage, peuvent causer des dommages internes graves. NE PAS exposer la lentille frontale de l'appareil à des rayons lumineux provenant de la lumière directe du soleil ou de toute autre source lumineuse intense, sous quelque angle que ce soit, lors du déballage, de l'installation, de l'utilisation ou de périodes d'inactivité prolongées à l'extérieur. NE PAS diriger un faisceau lumineux d'un appareil d'éclairage directement vers un autre.

02/ Technical Specifications

AC Power	100-240Vac; 50/60Hz	
Max. Power Consumption	585W	
Light Source	PHILIPS MSD Platinum 19 R LL	
Color Temperature	6700K	
Beam Angle	1.3°	
Color Wheel	13 colors + CRI + open	
Gobo Wheel	Static Gobo Wheel	10 gobos + 3 effect gobos + open
Movement	Pan	540°
	Tilt	260°
	16 bit movement resolution	
	Automatic pan/tilt repositioning	
	Mechanical pan/tilt lock for safe transportation and maintenance	
Control and Programming	DMX Channels	24
	Protocols	DMX512
		RDM
		Art-Net
		sACN
	Firmware Update	via DMX or USB memory device
Construction	Display	LCD display
	Battery backup for user setup without mains connection	
	DMX and RDM Data In/Out	5-pin IP XLR (optional with 3-pin IP XLR)
		RJ45 Connectors
	Power In/Out	Waterproof Power Connector in/out
	Protection Rating	IP66
Dynamic Effects	0-100% continuous dimming and strobe effects	
	CMY color mixing	
	Variable color temperature control	
	FX wheel: 1 x CTO filter with gradually changing color temperature 3 effect gobos, which can be overlapped with the static gobo wheel Provide two softening effects	
	Prisms: four indexing/rotating prisms	
	Motorized focus	
	Frost: Variable 0%-100%	

Included Items	Power Cable	
	Two omega brackets with 1/4-turn fasteners	
	User Manual (this document)	
Dimensions	380x284x659mm	15"x11.2"x25.9"
Weight	31 kg	68.3 lbs

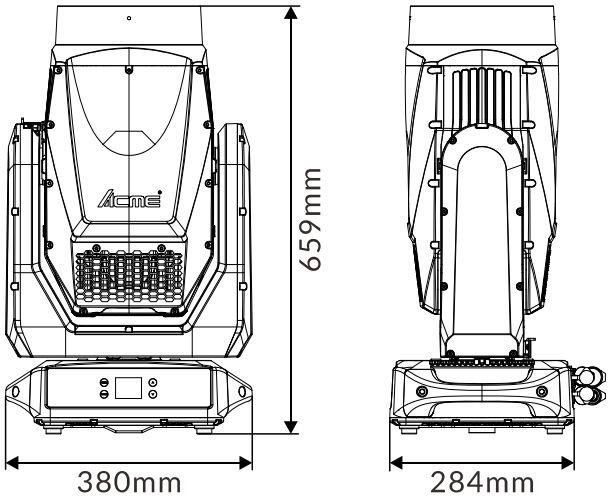

Photometric Diagram:

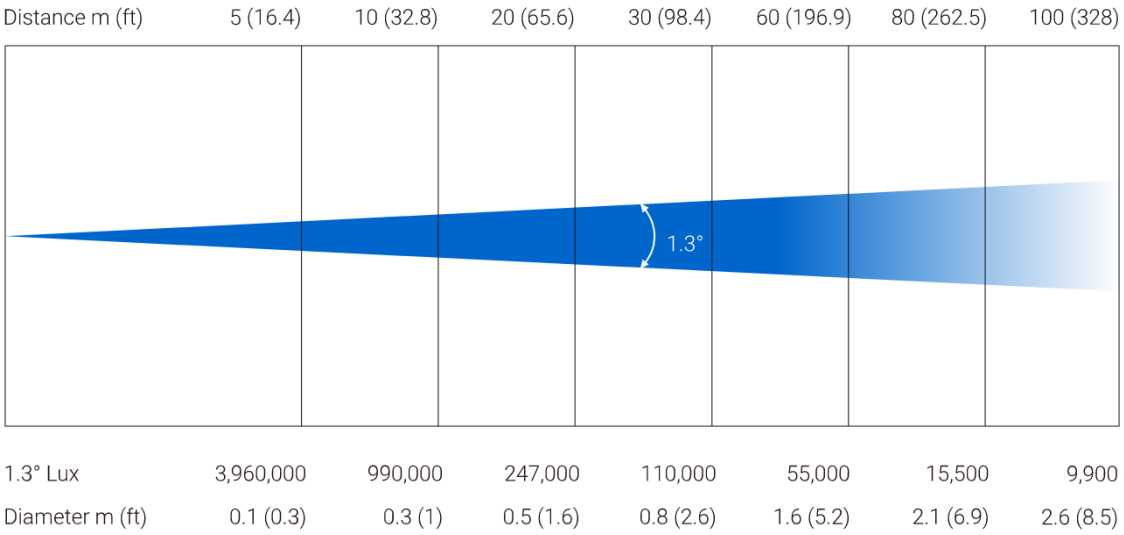

03/ Overview

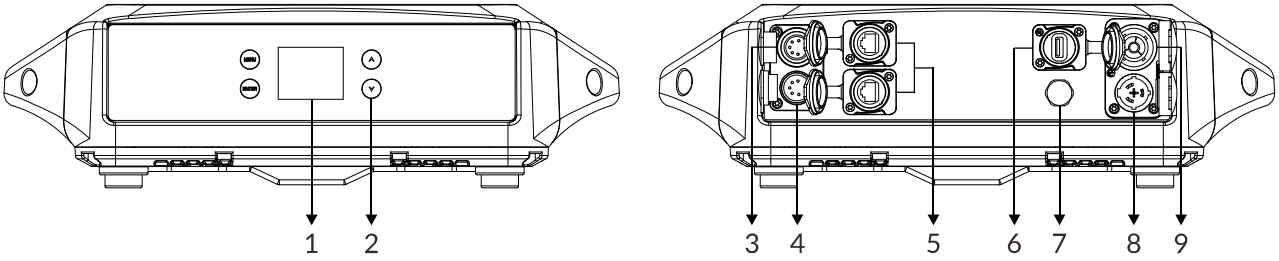

1. Display	To show the various menus and the selected function	
2. Buttons	MENU	To enter into, move backward or leave the menu
	▲ UP	To go backward or move up in the menu
	▼ DOWN	To go forward or move down in the menu
	ENTER	To perform the desired functions
3. DMX OUT	For DMX512 link, use 5-pin XLR cable to link the next units to output DMX signal (optional with 3-pin IP XLR)	
4. DMX IN	For DMX512 link, use 5-pin XLR cable to link the unit and DMX controller to input DMX signal (optional with 3-pin IP XLR)	
5. ETHERNET	For use with sACN or Art-Net controls	
6. FIRMWARE UPGRADE	Used to upgrade the fixture's firmware	
7. RELEASE VALVE		
8. POWER IN	To connect to supply power	
9. POWER OUT	To connect to the next fixture	

3.1 Battery Power

This product contains a rechargeable battery.

Battery type: 18650 Lithium-ion battery (3.7V, 2200mAh, 8.14Wh), compliant with the new EU battery regulation EU2023/1542.

Do not expose the fixture or battery to excessive temperatures.

Be aware of the risk of terminals of the battery-operated fixture or battery being short-circuited by metal objects.

This fixture contains battery that is only replaceable by skilled persons.

Different types of batteries or new and used batteries are not to be mixed.

Exhausted batteries are to be removed from the fixture and safely disposed of.

If the fixture is to be stored unused for a long period, the batteries should be removed.

Do not use non-rechargeable batteries in place of rechargeable batteries.

Do not use modified or damaged batteries.

Replacing the battery with an incorrect type can defeat a safeguard and pose a risk of fire or explosion.

Disposal of a battery into fire or a hot oven, or mechanically crushing or cutting of a battery, that can result in an explosion.

Leaving a battery in an extremely high temperature surrounding environment that can result in an explosion or the leakage of flammable liquid or gas.

Using the control panel with battery power:

The fixture contains a battery that enables you to use the control panel to set up the fixture even when it is not connected to the main power supply. The battery charges during fixture operation. All of the main setup options in the control panel are accessible on battery power, but the ‘Fixture Test’ and ‘Reset Function’ are not available.

To activate the display when the fixture is not connected to power, press and hold the [▲ UP] button for 3 seconds. The display extinguishes after 30 seconds with no user input. Press and hold the [▲ UP] button for 3 seconds again to re-activate.

Battery Replacement:

Warning! Disconnect the fixture from AC power before replacing its battery. Replace the battery with one of the same type only.

1. Disconnect the fixture from AC mains power and allow to cool.

2. Remove eight screws in the arm cover of the fixture and remove the arm cover.

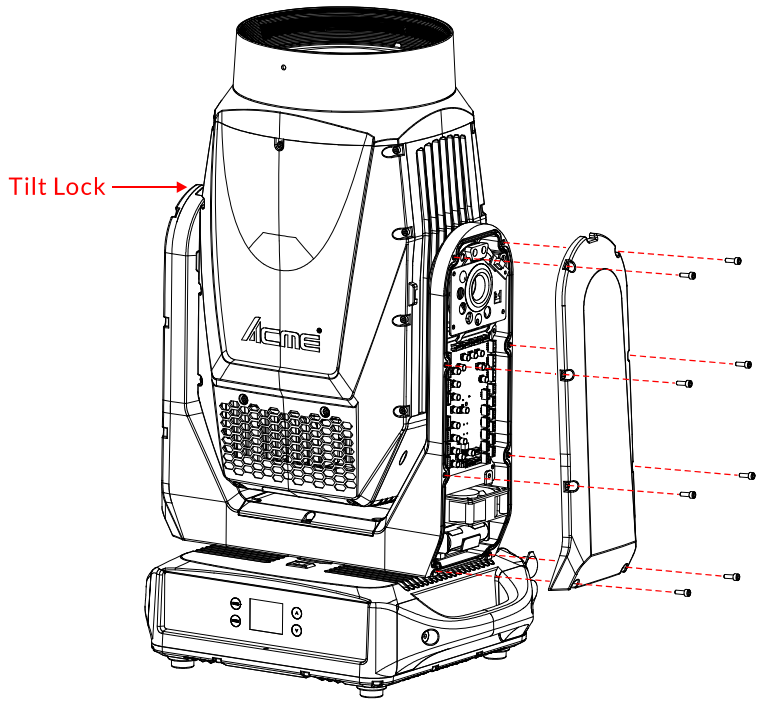

3. Remove two screws of the battery bracket that holds the battery in place and remove the battery bracket.

4. Remove the exhausted battery and insert a new one (only the same type) into the battery holder (Negative (-) towards the spring, Positive (+) away from the spring).

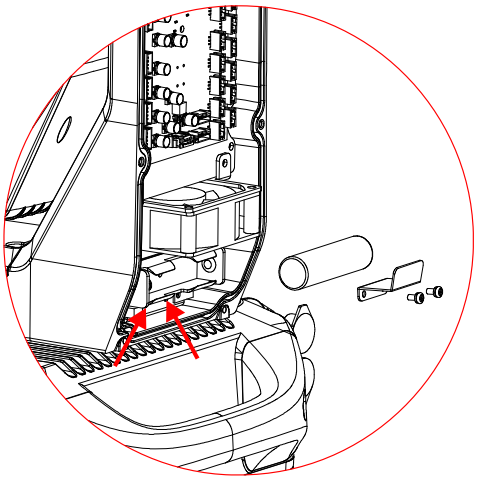

5. Reinstall the battery bracket and the arm cover and check that it is close securely before reapplying power.

04/ Connecting Power and Data

4.1 Connecting Power

To apply power, first check that the head pan and tilt locks are released.

This fixture can operate on any 100-240Vac; 50/60Hz AC mains power supply.

The maximum power consumption is 585W.

The fixture must be grounded/earthed and able to be isolated from AC power. The AC power supply must incorporate a fuse or circuit breaker for fault protection.

Wiring and connection work must be carried out by a qualified electrician.

The power cable color coding is given in the figure below:

Wire	Color (US)	Wire	Color (EU)	Symbol	Conductor
	black		brown	L	live
	white		blue	N	neutral
	green		yellow/green	⏚ or ⏚	ground (earth)

Power cord set that should be used: Listed SJOW flexible cord with rating: 300V, 105°C, VW-1, 16AWG x 3C, molded with 5-15P attachment plug and terminated with cord connector model RCAC3F-X-000-01 with rating 250V, 16A by Neutrik Technology(Ningbo) Co.,Ltd. The power cord shall be at least 914mm (It is to be measured from the face of attachment plug to the face of connector).

CAUTION!

DO NOT CONNECT THE FIXTURE TO AN ELECTRICAL DIMMER SYSTEM AS DOING SO MAY CAUSE DAMAGE.

4.2 Connecting Data

The fixture is equipped with 5-pin (or 3-pin) XLR sockets for DMX input and output. Use a high-quality DMX cable designed for RS-485 and 5-pin (or 3-pin) XLR-plugs and connectors in order to connect the controller with the fixture or one fixture with another. For outdoor installations, use only IP-rated XLR connectors suitable for outdoor use.

Building a serial DMX chain:

Connect the DMX data output from the controller to the fixture's data input socket. Connect the DMX output of the first fixture in the DMX chain with the DMX input of the next fixture. Always connect one output with the input of the next fixture until all fixtures are connected. Up to 32 fixtures can be connected to the same DMX link. Terminate the DMX out cable of the last fixture in the data link with a 120 ohm DMX terminator.

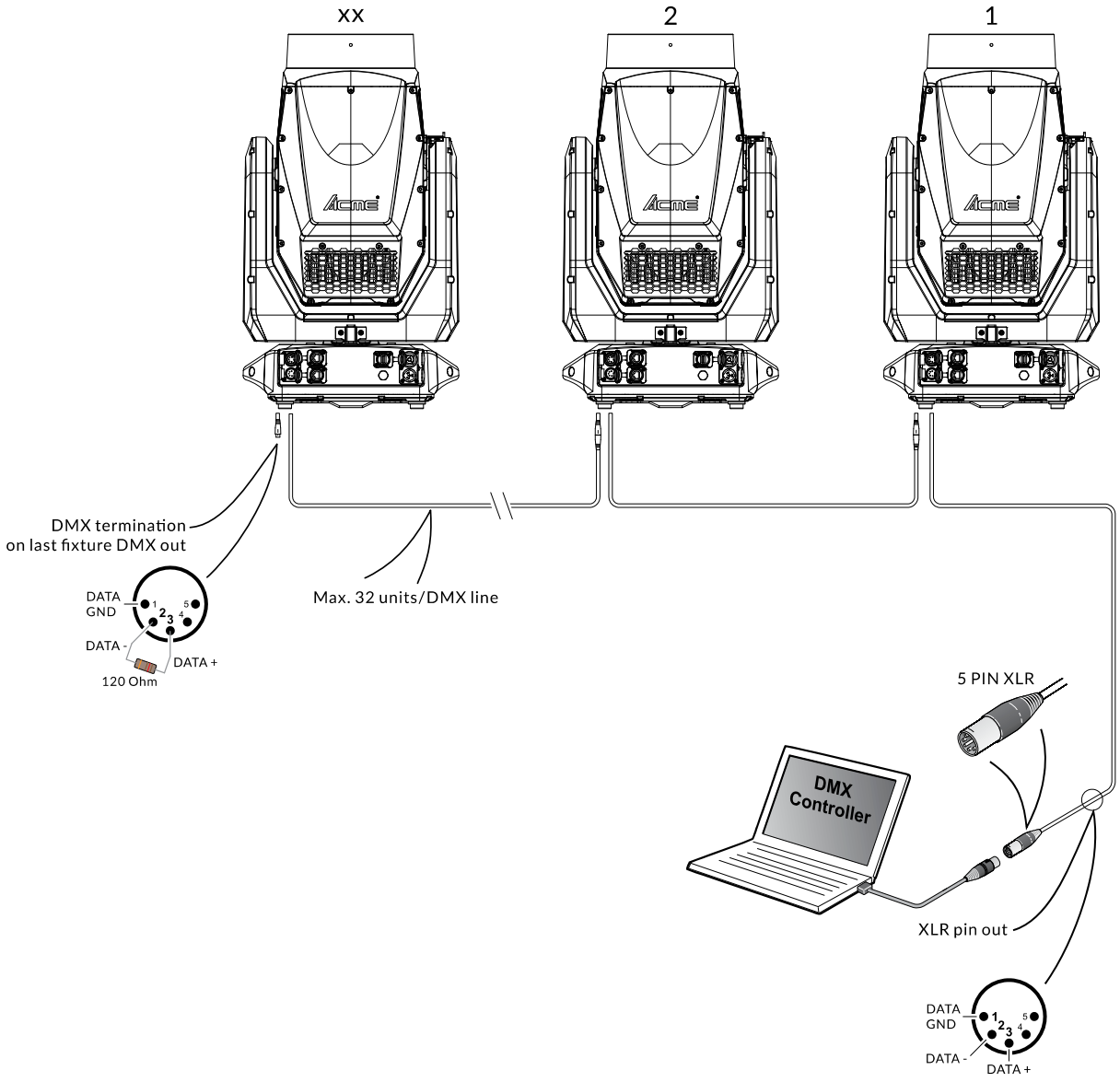

05/ Fixture Installation

The fixture is IP66-rated and designed for both indoor and outdoor events. This means that it is protected from:

- Dust, to the degree that dust cannot enter the device in sufficient quantities as to interfere with its operation.
- Water jets from any direction.

DO install and operate by qualified operator. Fixture(s) should be installed in areas outside walking paths, seating areas, or away from areas were unauthorized personnel might reach the fixture by hand. NEVER stand directly below the fixture(s) when rigging, removing or servicing.

Always ensure that the unit is firmly fixed to avoid vibration and slipping off during operation. Ensure that the trussing or area of installation must be able to hold 10 times the weight without any deformation. Always attach a safety cable that can hold at least 12 times the weight of the fixture whenever installing this fixture in a suspended environment to ensure that the fixture will not fall if the clamp fails.

This fixture is fully operational in three different mounting positions: hanging upside-down, mounted sideways on truss, or base positioned on floor. Always use and install a safety cable as a safety measure to prevent accidental damage and/or injury in the event the clamp fails.

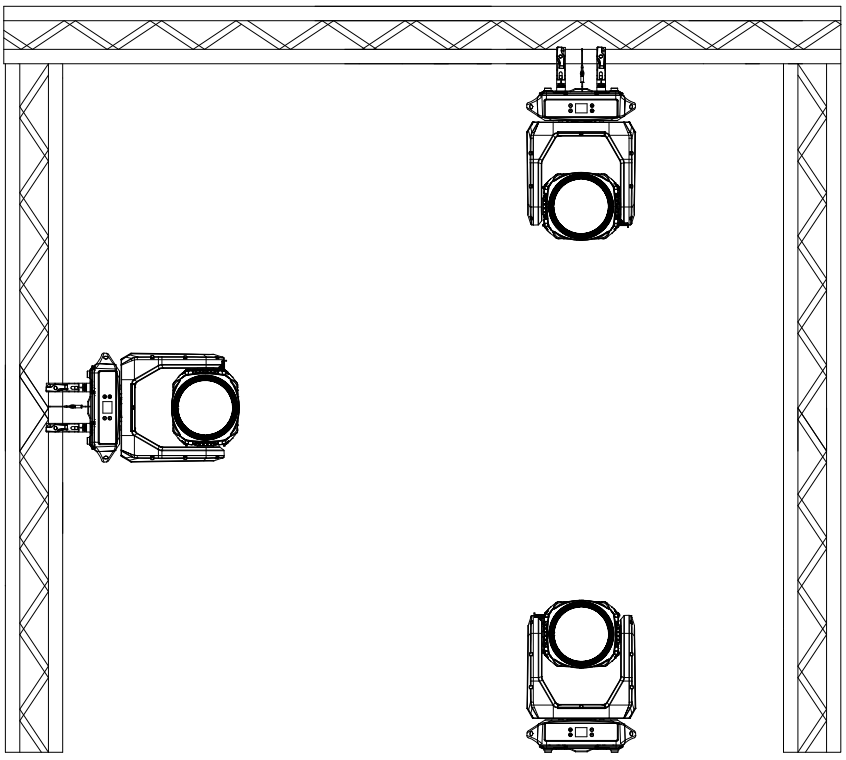

⚠ Side Mounting

To maintain the IP66 rating integrity of the fixture,
all cables must be run towards the ground
to prevent water accumulation around the connections.

System menu
LCD display

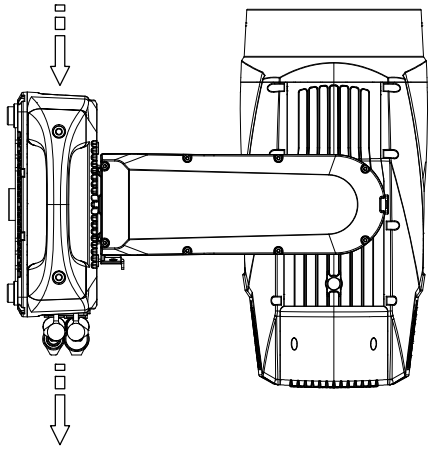

Cables

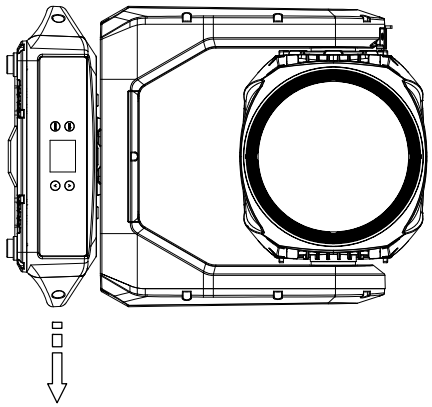

Cables

- Use only IP-rated power cords and connectors suitable for outdoor use.
- Visually check panel connectors on accidental water leaks and dust
  before connecting related cable connectors.
  If some water appears in panel connectors, do not connect cable connectors, especially power!
- Fixtures require regular maintenance.
  Carefully check panel connectors for corrosion and scorching,
  and replace them promptly if damaged.

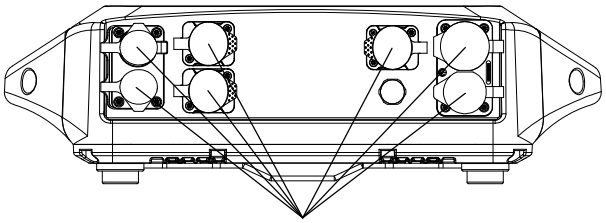

All unused panel connectors have to be sealed by the rubber caps
to avoid contact with water, especially seawater.

Steps for installing omega brackets to the fixture:

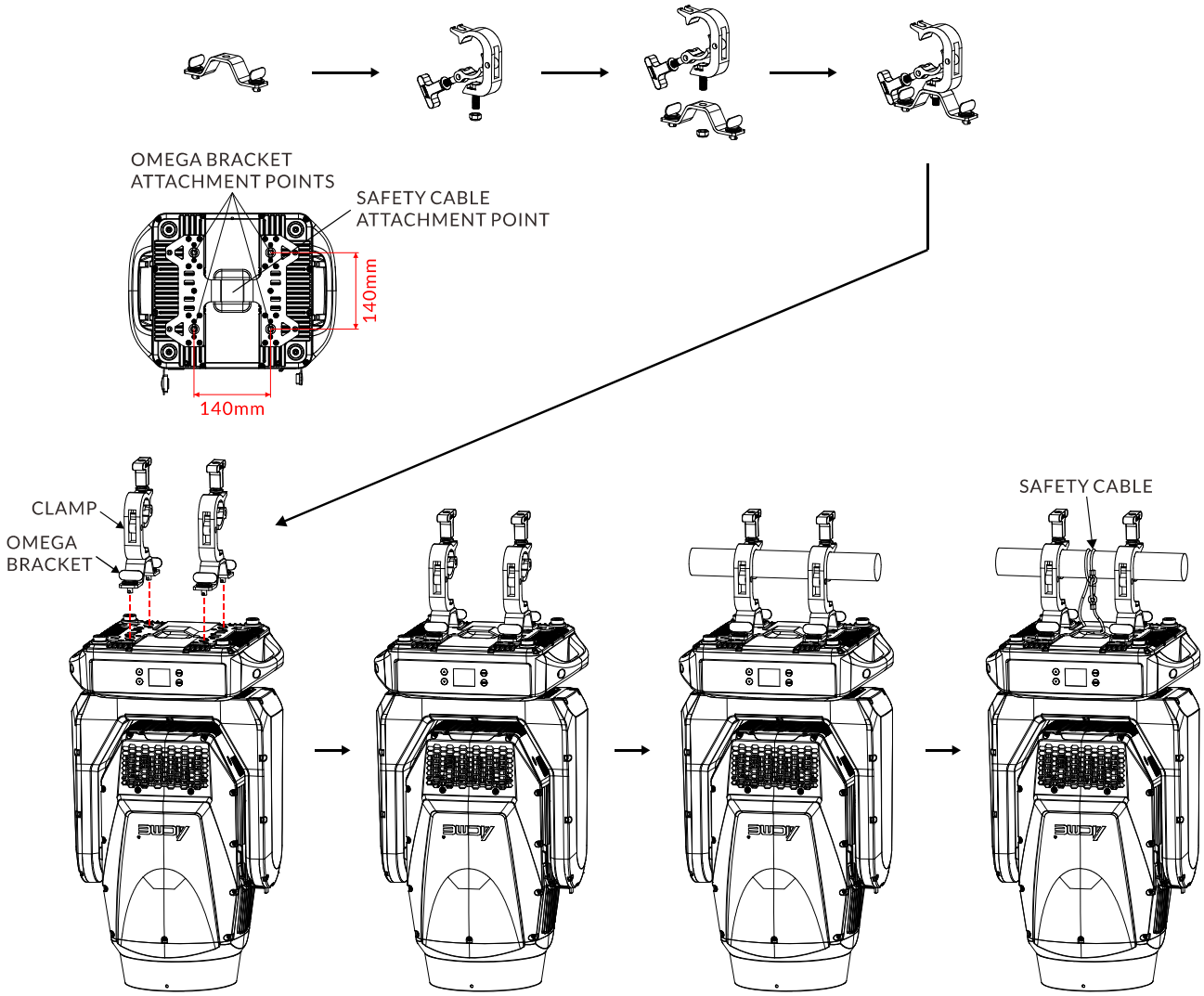

06/ Effect Wheels & Lamp

6.1 Effect Wheels

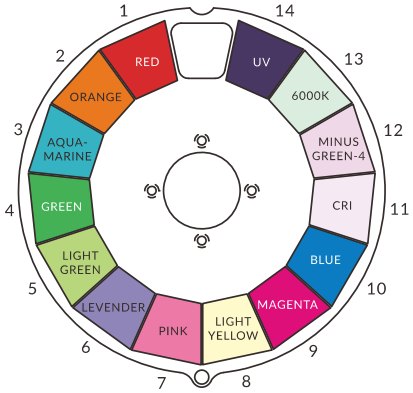

Color Wheel

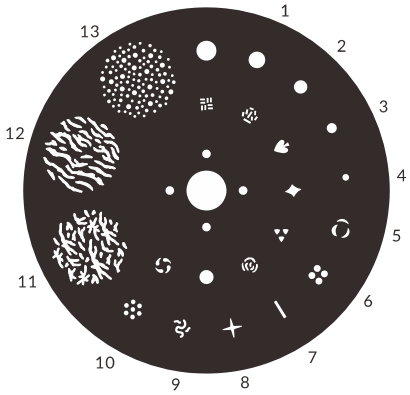

Static Gobo Wheel

FX Wheel

DANGER!
Replace the color wheel / gobo wheel with the device switched off only.
Unplug from mains before replacing the color wheel / gobo wheel!

6.2 Light Source

PHILIPS MSD Platinum 19 R LL

Because of its high internal pressure, there might be a risk that the discharge lamp would explode during operation. The lamp emits intense UV radiation which is harmful to the eyes and skin. The high luminance of the arc can cause severe damage to the retina if you take a close look at the lamp.

- To protect the lamp, always turn off the lamp first (via control panel or DMX controller) and let the unit run at least five minutes to cool down before switching off the mains supply. Never handle the lamp or luminary when it is hot.
- Do not touch the bulb with bare hands. If this happens, clean the lamp with denatured alcohol and wipe it with a lint free cloth before installation.
- The lamp generates UV radiation. Never operate the lamp without appropriate shielding.
- When lighting up, the lamp operates at high pressure and there is a slight risk of arc tube rupture. The risk increases with age, temperature and improper handling of the lamp. Do not use the lamp longer than its lifespan.
- Make sure the lamp is located in the center of the reflector for the best projection.

6.3 Lamp Replacement Warning

- When the lamp reaches 300 hours before its service time, the display will flash the message “Replace Lamp Soon” for up to 5 minutes. During this period, the fixture will still work normally.
- When the lamp reaches its service time, the display will flash the message “Replace Lamp Now” for up to 10 minutes. After 10 minutes, the fixture will return to normal operation.
- When the lamp is continuously used overtime, the display will flash the message “Lamp Timeout Use, Replace Lamp Now” for up to 10 minutes. After 10 minutes, the fixture will return to normal operation.

ATTENTION

Damages caused by the failure to replace the bulb in time are not subject to warranty.

07/ Operation

7.1 Control Menu

- To access the control menus, press the [MENU] button.
- Navigate the menu structure, using the [ENTER], [▲ UP] and [▼ DOWN] buttons.
- To select a menu option or to confirm a selection, press the [ENTER] button.
- To return to a higher level in the menu structure without making a change, press the [MENU] button, or wait 30 seconds.

The screen locks after 30 seconds of inactivity.

Press and hold the [MENU] button to unlock the screen.

The main functions are shown below:

MAIN MENU	SUBMENU	CHOICES/VALUES		
DMX Settings	DMX Address	1-489	(Default=1)	
	DMX Channel Mode	Mode 1 (24CH)		
	No DMX Status	Blackout		
		Hold		
		Manual		
	View DMX Value			
	Connect Option	Auto		
		DMX		
		Art-Net		
		sACN		
	Network	IP Address	Default 1:002.xxx.xxx.xxx	
			Default 2:010.xxx.xxx.xxx	
			Manual:xxx.xxx.xxx.xxx	
		Subnet Mask	xxx.xxx.xxx.xxx	
	Art-Net Settings	Net	0-127	(Default=0)
		Subnet	0-15	(Default=0)
		Universe	0-15	(Default=0)
	sACN Settings	Universe	1-32000	(Default=1)
		Priority	0-200	(Default=100)
	Network to DMX	No		
		Yes		
Fixture Settings	Pan Invert	No		
		Yes		
	Tilt Invert	No		
		Yes		
	P/T Feedback	No		
		Yes		
	Gobo Short Cut	Enable		
		Disable		
	Color Short Cut	Enable		
		Disable		

MAIN MENU	SUBMENU	CHOICES/VALUES	
Lamp Settings	Lamp On/Off	Off	
		On	
	Lamp on with Power	Off	
		On	
	Lamp on via DMX	Off	
		On	
	Lamp off via DMX	Off	
		On	
Display Settings	Display Invert	No	
		Yes	
	Temperature Unit	°C	
		°F	
	Language	English	
		Chinese	
Fixture Test	Auto Test	Single	
		Cycle	
	Manual Test	Clear	No/Yes
		Pan	0-255
		Tilt	0-255
		Cyan	0-255
		Magenta	0-255
		Yellow	0-255
		CTO	0-255
		Color	0-255
		Gobo	0-255
		FX Wheel	0-255
		Prism	0-255
		R-Prism 1	0-255
		R-Prism 2	0-255
		Strobe	0-255
		Dimmer	0-255
		Focus	0-255
		Frost	0-255

MAIN MENU	SUBMENU	CHOICES/VALUES		
Fixture Information	Fixture Use Hour			
	Lamp Use Time	Password=050	Work Mode	
			Sleep Mode	
			Sleep Ratio	
	Lamp Time Reset	Password=050		
	Lamp State	Driver State		
		Lamp Voltage		
		Fault Mode		
	Temperature		Current	Max
		Base		
		Head		
	Humidity		Current	Max
		Base		
		Head		
	Fan State	Head Fan 1-9		
		Arm Fan 1-2		
		Base Fan 1-2		
	Firmware Version			
	RDM UID			
	Error Logs	Fixture Errors		
		Reset Error Log	No	
			Yes	Password=050
Reset Function	Pan/Tilt Reset	No		
		Yes		
	Effect Reset	No		
		Yes		
	All Reset	No		
		Yes		
Special Function	USB Upgrade	No		
		Yes		
	Send Upgrade	No		
		Yes		
	Firmware Restore	No		
		Yes		
	Factory Settings	No		
		Yes		

DMX Settings

Enter the control menu and select **DMX Settings**, press ENTER. Use the UP/DOWN button to select **DMX Address, DMX Channel Mode, No DMX Status, View DMX Value, Connect Option, Network, Art-Net Settings, sACN Settings** or **Network to DMX.**

DMX Address

Select **DMX Address,** press ENTER.

Use UP/DOWN button to select an address, confirm your selection with ENTER.

CHANNEL MODE	DMX ADDRESS
Mode 1 (24CH)	1-489

To exit the menu, press MENU, or wait 30 seconds.

DMX Channel Mode

Select **DMX Channel Mode,** press ENTER.

Use UP/DOWN button to select **Mode 1 (24CH)**, confirm your selection with ENTER.

To exit the menu, press MENU, or wait 30 seconds.

No DMX Status

Select **No DMX Status,** press ENTER.

Use UP/DOWN button to select one of the following status:

Blackout (Fixture blacks out if DMX signal stops)

Hold (The device continues to operate in the current mode with the last active DMX values until the signal returns)

Manual (The device accepts the DMX value stored in the 'Manual Test' menu)

Confirm your selection with ENTER.

To exit the menu, press MENU, or wait 30 seconds.

View DMX Value

Select **View DMX Value,** press ENTER.
Use UP/DOWN button to select the desired DMX channel, for which the value is to be displayed.
To exit the menu, press MENU, or wait 30 seconds.

Connect Option

Select **Connect Option,** press ENTER.
Use UP/DOWN button to select **Auto, DMX, Art-Net** or **sACN**, confirm your selection with ENTER.
To exit the menu, press MENU, or wait 30 seconds.

Network

Select **Network,** press ENTER.
Use UP/DOWN button to select **IP Address** or **Subnet Mask**, confirm your selection with ENTER.
To exit the menu, press MENU, or wait 30 seconds.

Art-Net Settings

Select **Art-Net Settings,** press ENTER.
Use UP/DOWN button to select **Net, Subnet** or **Universe**, confirm your selection with ENTER.
To exit the menu, press MENU, or wait 30 seconds.

sACN Settings

Select **sACN Settings,** press ENTER.
Use UP/DOWN button to select **Universe** or **Priority**, confirm your selection with ENTER.
To exit the menu, press MENU, or wait 30 seconds.

Network to DMX

Select **Network to DMX,** press ENTER.
Use UP/DOWN button to select **No** or **Yes**, confirm your selection with ENTER.
To exit the menu, press MENU, or wait 30 seconds.

Fixture Settings

Enter the control menu and select **Fixture Settings**, press ENTER. Use the UP/DOWN button to select **Pan Invert, Tilt Invert, P/T Feedback, Gobo Short Cut** or **Color Short Cut.**

Pan Invert

Select **Pan Invert,** press ENTER.
Use UP/DOWN button to select **No** (pan invert deactivated) or **Yes** (pan invert activated), confirm your selection with ENTER.
To exit the menu, press MENU, or wait 30 seconds.

Tilt Invert

Select **Tilt Invert,** press ENTER.
Use UP/DOWN button to select **No** (tilt invert deactivated) or **Yes** (tilt invert activated), confirm your selection with ENTER.
To exit the menu, press MENU, or wait 30 seconds.

P/T Feedback

Select **P/T Feedback,** press ENTER.
Use UP/DOWN button to select **No** (pan/tilt feedback deactivated) or **Yes** (pan/tilt feedback activated), confirm your selection with ENTER.
To exit the menu, press MENU, or wait 30 seconds.

Gobo Short Cut

Select **Gobo Short Cut,** press ENTER.
Use UP/DOWN button to select **Enable** or **Disable**, confirm your selection with ENTER.
To exit the menu, press MENU, or wait 30 seconds.

Color Short Cut

Select **Color Short Cut,** press ENTER.
Use UP/DOWN button to select **Enable** or **Disable**, confirm your selection with ENTER.
To exit the menu, press MENU, or wait 30 seconds.

Lamp Settings

Enter the control menu and select **Lamp Settings**, press ENTER. Use the UP/DOWN button to select **Lamp On/Off, Lamp ON with Power, Lamp ON via DMX** or **Lamp OFF via DMX.**

Lamp On/Off

Select **Lamp On/Off,** press ENTER.
Use UP/DOWN button to select **Off** (lamp off) or **On** (lamp on), confirm your selection with ENTER.
To exit the menu, press MENU, or wait 30 seconds.

Lamp ON with Power

Select **Lamp ON with Power,** press ENTER.
Use UP/DOWN button to select **Off** (lamp off while power on) or **On** (lamp on while power on), confirm your selection with ENTER.
To exit the menu, press MENU, or wait 30 seconds.

Lamp ON via DMX

Select **Lamp ON via DMX,** press ENTER.
Use UP/DOWN button to select **Off** or **On**, confirm your selection with ENTER.
To exit the menu, press MENU, or wait 30 seconds.

Lamp OFF via DMX

Select **Lamp OFF via DMX,** press ENTER.
Use UP/DOWN button to select **Off** or **On**, confirm your selection with ENTER.
To exit the menu, press MENU, or wait 30 seconds.

Display Settings

Enter the control menu and select **Display Settings**, press ENTER. Use the UP/DOWN button to select **Display Invert, Temperature Unit** or **Language.**

Display Invert

Select **Display Invert,** press ENTER.
Use UP/DOWN button to select **No** (display normal) or **Yes** (display inverted), confirm your selection with ENTER.
To exit the menu, press MENU, or wait 30 seconds.

Temperature Unit

Select **Temperature Unit,** press ENTER.
Use UP/DOWN button to select **°C** or **°F**, confirm your selection with ENTER.
To exit the menu, press MENU, or wait 30 seconds.

Language

Select **Language,** press ENTER.
Use UP/DOWN button to select **English** or **Chinese**, confirm your selection with ENTER.
To exit the menu, press MENU, or wait 30 seconds.

Fixture Test

Enter the control menu and select **Fixture Test**, press ENTER. Use the UP/DOWN button to select **Auto Test** or **Manual Test.**

Auto Test

Select **Auto Test,** press ENTER.
Use UP/DOWN button to select **Single** (the device immediately performs a single automatic self-test) or **Cycle** (the device immediately performs a cyclic automatic self-test), confirm your selection with ENTER.
To exit the menu, press MENU.

Manual Test

Select **Manual Test,** press ENTER.
Use UP/DOWN button to select the channel for which the manual test is to be performed, confirm your selection with ENTER.
Use UP/DOWN button to select a value, confirm your selection with ENTER.
To exit the menu, press MENU.
(The device returns to its original DMX state after the manual test. The test values are saved automatically when the device is switched off.)

Fixture Information

Enter the control menu and select **Fixture Information**, press ENTER. Use the UP/DOWN button to select **Fixture Use Hour, Lamp Use Time, Lamp Time Reset, Lamp State, Temperature, Humidity, Fan State, Firmware Version, RDM UID** or **Error Logs.**

Fixture Use Hour

Select **Fixture Use Hour,** press ENTER.
The operating hours is displayed.
To exit the menu, press MENU, or wait 30 seconds.

Lamp Use Time

Select **Lamp Use Time,** press ENTER.
The lamp operating hours is displayed.
Long press ENTER, use UP/DOWN button to set the password 050, press ENTER. The lamp operating hours of work mode, sleep mode and sleep ratio is displayed.
To exit the menu, press MENU, or wait 30 seconds.

Lamp Time Reset

Select **Lamp Time Reset,** press ENTER.
Use UP/DOWN button to set the password 050, confirm your selection with ENTER. The lamp operating hours is reset.
To exit the menu, press MENU, or wait 30 seconds.

Lamp State

Select **Lamp State,** press ENTER.

The lamp status is displayed.

To exit the menu, press MENU, or wait 30 seconds.

Temperature

Select **Temperature,** press ENTER.

The device temperature is displayed.

To exit the menu, press MENU, or wait 30 seconds.

Humidity

Select **Humidity,** press ENTER.

The device humidity is displayed.

To exit the menu, press MENU, or wait 30 seconds.

Fan State

Select **Fan State,** press ENTER.

The fan status is displayed.

To exit the menu, press MENU, or wait 30 seconds.

Firmware Version

Select **Firmware Version,** press ENTER.

The firmware version is displayed.

To exit the menu, press MENU, or wait 30 seconds.

RDM UID

Select **RDM UID,** press ENTER.

The RDM UID is displayed.

To exit the menu, press MENU, or wait 30 seconds.

Error Logs

Select **Error Logs,** press ENTER.
Use UP/DOWN button to select **Fixture Errors**, confirm your selection with ENTER.
The error list is displayed.
Use UP/DOWN button to select **Reset Error Log**, confirm your selection with ENTER.
If you wish to reset the relevant error logs, select **Yes**. If you do not wish to reset anything, select **No**. Confirm your selection with ENTER.
If you select **Yes**, use UP/DOWN button to set the password 050, confirm your selection with ENTER. The relevant error logs are reset.
To exit the menu, press MENU, or wait 30 seconds.

Reset Function

Enter the control menu and select **Reset Function**, press ENTER. Use the UP/DOWN button to select **Pan/Tilt Reset, Effect Reset** or **All Reset.**

Pan/Tilt Reset

Select **Pan/Tilt Reset,** press ENTER.
Use UP/DOWN button to select **No** or **Yes** (the device will run built-in program to reset pan/tilt to their home positions), confirm your selection with ENTER.
To exit the menu, press MENU, or wait 30 seconds.

Effect Reset

Select **Effect Reset,** press ENTER.
Use UP/DOWN button to select **No** or **Yes** (the device will run built-in program to reset effect to their home positions), confirm your selection with ENTER.
To exit the menu, press MENU, or wait 30 seconds.

All Reset

Select **All Reset,** press ENTER.

Use UP/DOWN button to select **No** or **Yes** (the device will run built-in program to reset all to their home positions), confirm your selection with ENTER.

To exit the menu, press MENU, or wait 30 seconds.

Special Function

Enter the control menu and select **Special Function**, press ENTER. Use the UP/DOWN button to select **USB Upgrade, Send Upgrade, Firmware Restore** or **Factory Settings.**

USB Upgrade

Select **USB Upgrade,** press ENTER.

The upgrade files are displayed. (See the 'Updating Software' section for details.)

To exit the menu, press MENU, or wait 30 seconds.

Send Upgrade

Select **Send Upgrade,** press ENTER.

If you wish to send upgrade files from this fixture to other fixtures to upgrade their firmware, select **Yes**. Once Yes is selected, the display of this fixture will show "**Sending Packet, Please Wait...**" while the display of other fixtures will show "**Upgrading, Please Wait...**". A percentage bar will also be displayed. After the update is complete, fixtures will perform a reset (this can take some time).

If you do not wish to send anything, select **No**. Confirm your selection with ENTER.

To exit the menu, press MENU, or wait 30 seconds.

Firmware Restore (After replacing fixture's vice board(s), this function allows you to synchronize the main board's software to all vice board(s), as the software version of the replaced vice board(s) may not consistent with that of the main board.)

Select **Firmware Restore,** press ENTER.
If you wish to restore fixture's firmware, select **Yes**. Once Yes is selected, the display will show "**Upgrading, Please Wait...**". A percentage bar will also be displayed. After the update is complete, the fixture will perform a reset (this can take some time).
If you do not wish to restore anything, select **No**. Confirm your selection with ENTER.
To exit the menu, press MENU, or wait 30 seconds.

Factory Settings

Select **Factory Settings,** press ENTER.
If you wish to reset the device to the factory settings, select **Yes**. If you do not wish to reset anything, select **No**. Confirm your selection with ENTER.
To exit the menu, press MENU, or wait 30 seconds.

7.2 Updating Software

Only qualified technicians should perform this function! Note all menu settings before updating software! Please note, up to 32 fixtures can be connected together and updated at the same time.

Note: Before using the USB flash drive to update the software, please ensure that the USB flash drive is formatted with the FAT32 file system. Otherwise, you will need to reformat the USB flash drive to FAT32 before transferring the .yfu files, as the fixture will only recognize the files stored on a FAT32 formatted drive.

Format the USB flash drive:

- Connect the USB flash drive to the computer.
- Right-click on the USB flash drive disk.
- Click "Format".
- Select the "FAT32" file system and click "Start".

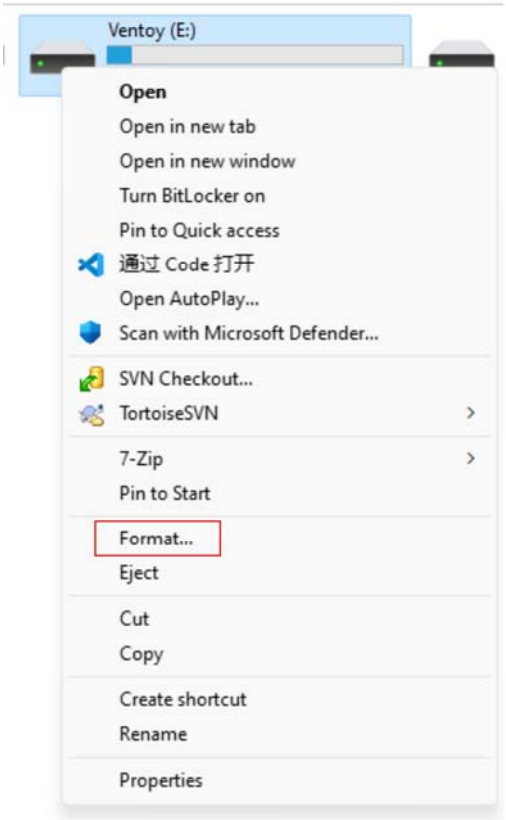

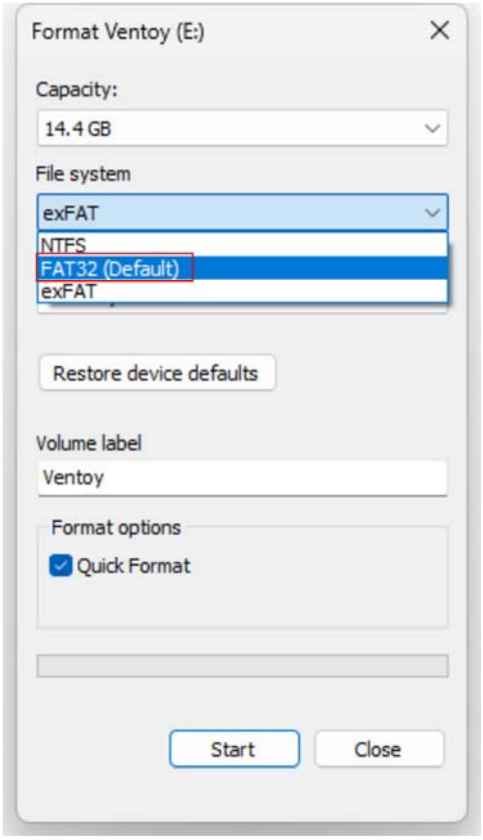

Updating Software:

1. Download the software update files from the ACME website.
2. Copy the software files to a compatible USB flash drive.

Note: To avoid the risk of uploading the wrong file to the fixture, make sure that there are no other files on your flash drive.

3. Disconnect DMX and Ethernet connections and power the fixture on.
4. Insert the USB flash drive into the **FIRMWARE UPGRADE** port located on the rear panel of the fixture.
5. Locate "**Special Function**" within the system menu and press ENTER. Scroll to the "**USB Upgrade**" submenu and press ENTER.
6. Two software files will be displayed as downloaded earlier. Highlight the first file (V00) and press ENTER. Select "**Yes**" to begin the first of two updating processes. Once Yes is selected, the display will show "**Copying Files, Please Wait...**". After copying is complete, the display will show "**Upgrading, Please Wait...**". A percentage bar will also be displayed.
7. After the first update is complete, the fixture will perform a reset (this can take some time).
8. Once the reset is complete, scroll to the "**Special Function**" menu again and press ENTER. Scroll to the "**USB Upgrade**" submenu and press ENTER.
9. Highlight the second file (Vxx) this time and press ENTER. Select "**Yes**" to begin the second and final updating process. Once Yes is selected, the display will show "**Copying Files, Please Wait...**" again. After copying is complete, the display will show "**Upgrading, Please Wait...**". A percentage bar will also be displayed.
10. After the second update is complete, the fixture will perform another reset (this can take some time as well).
11. Remove the USB flash drive.
12. After the reset process is complete, check the new software version to confirm it is updated to the most recent software.

RDM functions: Certain menus of the device and functions can be called up via the RDM protocol.

The parameter IDs are implemented as follows for different commands:

Standard RDM Parameter IDs

PID	Parameter IDs	Command 'Discovery'	Command 'Set'	Command 'Get'
0x0001	DISC_UNIQUE_BRANCH	√		
0x0002	DISC_MUTE	√		
0x0003	DISC_UN_MUTE	√		
0x0050	SUPPORTED_PARAMETERS			√
0x0051	PARAMETER_DESCRIPTION			√
0x0060	DEVICE_INFO			√
0x0080	DEVICE_MODEL_DESCRIPTION			√
0x0081	MANUFACTURER_LABEL			√
0x0082	DEVICE_LABEL		√	√
0x0090	FACTORY_DEFAULTS		√	√
0x00C0	SOFTWARE_VERSION_LABEL			√
0x00C1	BOOT_SOFTWARE_VERSION_ID			√
0x00C2	BOOT_SOFTWARE_VERSION_LABEL			√
0x00E0	DMX_PERSONALITY		√	√
0x00E1	DMX_PERSONALITY_DESCRIPTION			√
0x00F0	DMX_START_ADDRESS		√	√
0x0120	SLOT_INFO			√
0x0121	SLOT_DESCRIPTION			√
0x0200	SENSOR_DEFINITION			√
0x0201	SENSOR_VALUE			√
0x0400	DEVICE_HOURS			√
0x0401	LAMP_HOURS			√
0x0600	PAN_INVERT		√	√
0x0601	TILT_INVERT		√	√
0x1000	IDENTIFY_DEVICE		√	√
0x1001	RESET_DEVICE		√	√

√ -Command implemented for the respective parameter ID

7.3 Home Position Adjustment

- To access the control menus, press the [MENU] button.
- To access the offset menus, long-press the [ENTER] button.
- Navigate the offset menus, using the [ENTER], [▲ UP] and [▼ DOWN] buttons.
- To select a menu option or to confirm a selection, press the [ENTER] button.
- To return to a higher level in the menu structure without making a change, press the [MENU] button, or wait 30 seconds.

OFFSET MENU	VALUES
Pan	-128~127
Tilt	-128~127
Strobe	-128~127
Cyan	-128~127
Magenta	-128~127
Yellow	-128~127
CTO	-128~127
Color	-128~127
Gobo	-128~127
Soften	-128~127
Animation	-128~127
6 Prism	-128~127
8 Prism	-128~127
24 Prism	-128~127
48 Prism	-128~127
R-Prism 1	-128~127
R-Prism 2	-128~127
Focus	-128~127
Frost	-128~127

Pan

Select **Pan,** press ENTER.

Use UP/DOWN button to select a value between -128 and 127, confirm your selection with ENTER.

To exit the offset menu, press MENU, or wait 30 seconds.

Tilt

Select **Tilt,** press ENTER.
Use UP/DOWN button to select a value between -128 and 127, confirm your selection with ENTER.
To exit the offset menu, press MENU, or wait 30 seconds.

Strobe

Select **Strobe,** press ENTER.
Use UP/DOWN button to select a value between -128 and 127, confirm your selection with ENTER.
To exit the offset menu, press MENU, or wait 30 seconds.

Cyan

Select **Cyan,** press ENTER.
Use UP/DOWN button to select a value between -128 and 127, confirm your selection with ENTER.
To exit the offset menu, press MENU, or wait 30 seconds.

Magenta

Select **Magenta,** press ENTER.
Use UP/DOWN button to select a value between -128 and 127, confirm your selection with ENTER.
To exit the offset menu, press MENU, or wait 30 seconds.

Yellow

Select **Yellow,** press ENTER.
Use UP/DOWN button to select a value between -128 and 127, confirm your selection with ENTER.
To exit the offset menu, press MENU, or wait 30 seconds.

CTO

Select **CTO,** press ENTER.
Use UP/DOWN button to select a value between -128 and 127, confirm your selection with ENTER.
To exit the offset menu, press MENU, or wait 30 seconds.

Color

Select **Color,** press ENTER.
Use UP/DOWN button to select a value between -128 and 127, confirm your selection with ENTER.
To exit the offset menu, press MENU, or wait 30 seconds.

Gobo

Select **Gobo,** press ENTER.
Use UP/DOWN button to select a value between -128 and 127, confirm your selection with ENTER.
To exit the offset menu, press MENU, or wait 30 seconds.

Soften

Select **Soften,** press ENTER.
Use UP/DOWN button to select a value between -128 and 127, confirm your selection with ENTER.
To exit the offset menu, press MENU, or wait 30 seconds.

Animation

Select **Animation,** press ENTER.
Use UP/DOWN button to select a value between -128 and 127, confirm your selection with ENTER.
To exit the offset menu, press MENU, or wait 30 seconds.

6 Prism

Select **6 Prism,** press ENTER.
Use UP/DOWN button to select a value between -128 and 127, confirm your selection with ENTER.
To exit the offset menu, press MENU, or wait 30 seconds.

8 Prism

Select **8 Prism,** press ENTER.
Use UP/DOWN button to select a value between -128 and 127, confirm your selection with ENTER.
To exit the offset menu, press MENU, or wait 30 seconds.

24 Prism

Select **24 Prism,** press ENTER.
Use UP/DOWN button to select a value between -128 and 127, confirm your selection with ENTER.
To exit the offset menu, press MENU, or wait 30 seconds.

48 Prism

Select **48 Prism,** press ENTER.
Use UP/DOWN button to select a value between -128 and 127, confirm your selection with ENTER.
To exit the offset menu, press MENU, or wait 30 seconds.

R-Prism 1

Select **R-Prism 1,** press ENTER.
Use UP/DOWN button to select a value between -128 and 127, confirm your selection with ENTER.
To exit the offset menu, press MENU, or wait 30 seconds.

R-Prism 2

Select **R-Prism 2,** press ENTER.
Use UP/DOWN button to select a value between -128 and 127, confirm your selection with ENTER.
To exit the offset menu, press MENU, or wait 30 seconds.

Focus

Select **Focus,** press ENTER.
Use UP/DOWN button to select a value between -128 and 127, confirm your selection with ENTER.
To exit the offset menu, press MENU, or wait 30 seconds.

Frost

Select **Frost,** press ENTER.
Use UP/DOWN button to select a value between -128 and 127, confirm your selection with ENTER.
To exit the offset menu, press MENU, or wait 30 seconds.

08/ Configuring the Device for DMX Control

8.1 Address Setting

All fixtures should be given a DMX starting address when operating with a DMX controller, in order to ensure that the correct fixture responds to the correct control signal. Incorrect settings will result in unpredictable responses from the lighting controller.

You can set the same starting address for all fixtures or a group of fixtures, or set different addresses for each individual fixture.

Setting all fixtures to the same DMX address will cause all fixtures to react in the same way. In this case, please note that changing the settings of one channel will affect all the fixtures simultaneously.

If you set each fixture to a different DMX address, each unit will “listen” starting at the channel number you have set, based on the quantity of DMX channels of each fixture. That means changing the settings of one channel will only affect the selected fixture.

For example, if the first fixture is set to 24 ch DMX mode with a start DMX address of 1, the following fixture in the DMX chain should then be set to a DMX address of 25. As the first fixture uses all the first 24 DMX channels, the next available channel is 25 (24+1=25 >> 25).

See the chart below for more details:

Channel Mode	Unit 1 Address	Unit 2 Address	Unit 3 Address	Unit 4 Address	Unit xxx Address
24 channels	1	25	49	73	.....

8.2 DMX Protocol

Valid from firmware version: V1.0

24 Channels:

CHANNEL	VALUE	FUNCTION
1	000-255	**PAN** 0°→540°
2	000-255	**PAN FINE**
3	000-255	**TILT** 0°→260°
4	000-255	**TILT FINE**
5	000-255	**PAN/TILT SPEED** Fast to Slow
6	000-255	**CYAN** 0%→100%
7	000-255	**MAGENTA** 0%→100%
8	000-255	**YELLOW** 0%→100%
9	000-255	**CTO** (When the DMX value of the **FX WHEEL** channel is between 000 and 007, this channel functions normally) (When the DMX value of the **FX WHEEL** channel is between 008 and 255, this channel does not work) (When the DMX value of the **MACRO EFFECT** channel is between 000 and 007, this channel functions normally) (When the DMX value of the **MACRO EFFECT** channel is between 008 and 255, this channel does not work) 0%→100%
10	000-003 004-007 008-011 012-015 016-019 020-023 024-027 028-031 032-035 036-039 040-043 044-047 048-051	**COLOR WHEEL** Open Color 1 Color 2 Color 3 Color 4 Color 5 Color 6 Color 7 Color 8 Color 9 Color 10 Color 11 Color 12

	052-055	Color 13
	056-059	Color 14
	060-061	Open
	062-063	Open + Color 1
	064-065	Color 1
	066-067	Color 1 + Color 2
	068-069	Color 2
	070-071	Color 2 + Color 3
	072-073	Color 3
	074-075	Color 3 + Color 4
	076-077	Color 4
	078-079	Color 4 + Color 5
	080-081	Color 5
	082-083	Color 5 + Color 6
	084-085	Color 6
	086-087	Color 6 + Color 7
	088-089	Color 7
	090-091	Color 7 + Color 8
	092-093	Color 8
	094-095	Color 8 + Color 9
	096-097	Color 9
	098-099	Color 9 + Color 10
	100-101	Color 10
	102-103	Color 10 + Color 11
	104-105	Color 11
	106-107	Color 11 + Color 12
	108-109	Color 12
	110-111	Color 12 + Color 13
	112-113	Color 13
	114-115	Color 13 + Color 14
	116-117	Color 14
	118-119	Color 14 + Open
	120-127	Open
	128-189	Counter-Clockwise Rotation, Fast to Slow
	190-193	Stop
	194-255	Clockwise Rotation, Slow to Fast
11		**GOBO WHEEL** (When the DMX value of the **MACRO EFFECT** channel is between 000 and 007, this channel functions normally) (When the DMX value of the **MACRO EFFECT** channel is between 008 and 255, this channel does not work)
	000-007	Open
	008-010	Gobo 1
	011-013	Gobo 2
	014-016	Gobo 3
	017-019	Gobo 4
	020-022	Gobo 5

	023-025	Gobo 6
	026-028	Gobo 7
	029-031	Gobo 8
	032-034	Gobo 9
	035-037	Gobo 10
	038-043	Gobo 11 (effect gobo 1)
	044-049	Gobo 12 (effect gobo 2)
	050-055	Gobo 13 (effect gobo 3)
	056-059	Open Shaking, Slow to Fast
	060-063	Gobo 1 Shaking, Slow to Fast
	064-067	Gobo 2 Shaking, Slow to Fast
	068-071	Gobo 3 Shaking, Slow to Fast
	072-075	Gobo 4 Shaking, Slow to Fast
	076-079	Gobo 5 Shaking, Slow to Fast
	080-083	Gobo 6 Shaking, Slow to Fast
	084-087	Gobo 7 Shaking, Slow to Fast
	088-091	Gobo 8 Shaking, Slow to Fast
	092-095	Gobo 9 Shaking, Slow to Fast
	096-103	Gobo 10 Shaking, Slow to Fast
	104-111	Gobo 11 (effect gobo 1) Shaking, Slow to Fast
	112-119	Gobo 12 (effect gobo 2) Shaking, Slow to Fast
	120-127	Gobo 13 (effect gobo 3) Shaking, Slow to Fast
	128-189	Clockwise Rotation, Fast to Slow
	190-193	Stop
	194-255	Counter-Clockwise Rotation, Slow to Fast
12		**FX WHEEL** (When the DMX value of this channel is between 000 and 007, the **CTO** channel functions normally) (When the DMX value of this channel is between 008 and 255, the **CTO** channel does not work) (When the DMX value of the **MACRO EFFECT** channel is between 000 and 007, this channel functions normally) (When the DMX value of the **MACRO EFFECT** channel is between 008 and 255, this channel does not work)
	000-007	Open
	008-038	Soft Filter 1
	039-069	Soft Filter 2
	070-100	FX Gobo 1
	101-131	FX Gobo 1 Shaking, Slow to Fast
	132-162	FX Gobo 2
	163-193	FX Gobo 2 Shaking, Slow to Fast
	194-224	FX Gobo 3
	225-255	FX Gobo 3 Shaking, Slow to Fast
13		**PRISMS**
	000-007	Open
	008-038	Prism L6
	039-069	Prism C8

	070-100	Prism C24
	101-131	Prism T48
	132-162	Prism L6+Prism C24
	163-193	Prism L6+Prism T48
	194-224	Prism C8+Prism C24
	225-255	Prism C8+Prism T48
14		**PRISM 1 ROTATION (L6&C8)**
	000-127	Prism Index
	128-189	Clockwise Rotation, Fast to Slow
	190-193	Stop
	194-255	Counter-Clockwise Rotation, Slow to Fast
15		**PRISM 2 ROTATION (C24&T48)**
	000-127	Prism Index
	128-189	Clockwise Rotation, Fast to Slow
	190-193	Stop
	194-255	Counter-Clockwise Rotation, Slow to Fast
16		**MACRO EFFECT** (These macro effects are the superposition of the gobo and prism, and the rotation speed of the prism is controlled by the **PRISM ROTATION** channels) (When the DMX value of this channel is between 000 and 007, the **CTO, GOBO WHEEL** and **FX WHEEL** channel function normally) (When the DMX value of this channel is between 008 and 255, the **CTO, GOBO WHEEL** and **FX WHEEL** channel do not work)
	000-007	Null
	008-010	Macro Effect 1
	011-013	Macro Effect 2
	014-016	Macro Effect 3
	017-019	Macro Effect 4
	020-022	Macro Effect 5
	023-025	Macro Effect 6
	026-028	Macro Effect 7
	029-031	Macro Effect 8
	032-034	Macro Effect 9
	035-037	Macro Effect 10
	038-040	Macro Effect 11
	041-043	Macro Effect 12
	044-046	Macro Effect 13
	047-049	Macro Effect 14
	050-052	Macro Effect 15
	053-055	Macro Effect 16
	056-058	Macro Effect 17
	059-061	Macro Effect 18
	062-064	Macro Effect 19
	065-067	Macro Effect 20

	068-070	Macro Effect 21
	071-073	Macro Effect 22
	074-076	Macro Effect 23
	077-079	Macro Effect 24
	080-082	Macro Effect 25
	083-085	Macro Effect 26
	086-088	Macro Effect 27
	089-091	Macro Effect 28
	092-094	Macro Effect 29
	095-097	Macro Effect 30
	098-100	Macro Effect 31
	101-103	Macro Effect 32
	104-106	Macro Effect 33
	107-109	Macro Effect 34
	110-112	Macro Effect 35
	113-115	Macro Effect 36
	116-118	Macro Effect 37
	119-121	Macro Effect 38
	122-124	Macro Effect 39
	125-127	Macro Effect 40
	128-130	Macro Effect 41
	131-133	Macro Effect 42
	134-136	Macro Effect 43
	137-139	Macro Effect 44
	140-142	Macro Effect 45
	143-145	Macro Effect 46
	146-148	Macro Effect 47
	149-151	Macro Effect 48
	152-154	Macro Effect 49
	155-157	Macro Effect 50
	158-160	Macro Effect 51
	161-163	Macro Effect 52
	164-166	Macro Effect 53
	167-169	Macro Effect 54
	170-172	Macro Effect 55
	173-175	Macro Effect 56
	176-178	Macro Effect 57
	179-181	Macro Effect 58
	182-184	Macro Effect 59
	185-187	Macro Effect 60
	188-190	Macro Effect 61
	191-193	Macro Effect 62
	194-196	Macro Effect 63
	197-199	Macro Effect 64
	200-202	Macro Effect 65
	203-205	Macro Effect 66
	206-208	Macro Effect 67
	209-211	Macro Effect 68

	212-214	Macro Effect 69
	215-217	Macro Effect 70
	218-220	Macro Effect 71
	221-223	Macro Effect 72
	224-226	Macro Effect 73
	227-229	Macro Effect 74
	230-232	Macro Effect 75
	233-235	Macro Effect 76
	236-238	Macro Effect 77
	239-241	Macro Effect 78
	242-244	Macro Effect 79
	245-247	Macro Effect 80
	248-255	Null
17		**MACRO EFFECT SPEED**
	000-007	Stop
	008-255	Slow to Fast
18		**STROBE**
	000-007	Close
	008-015	Open
	016-131	Strobe from Slow to Fast
	132-167	Slow Open Fast Close from Slow to Fast
	168-203	Fast Open Slow Close from Slow to Fast
	204-239	Pulsation from Slow to Fast
	240-247	Random Strobe from Slow to Fast
	248-255	Open
19		**DIMMER**
	000-255	0%→100%
20	000-255	**DIMMER FINE**
21		**FOCUS**
	000-255	0%→100%
22	000-255	**FOCUS FINE**
23		**FROST**
	000-007	Close
	008-255	Open
24		**SPECIAL FUNCTION** (To activate following functions, stop in DMX value for at least 3 seconds.)
	000-069	Null
	070-079	Blackout While Pan/Tilt Move Enable
	080-089	Blackout While Pan/Tilt Move Disable
	090-099	Blackout While Color Move Enable
	100-109	Blackout While Color Move Disable
	110-119	Blackout While Gobo Move Enable
	120-129	Blackout While Gobo Move Disable
	130-139	Lamp On
	140-149	Reset Pan/Tilt

	150-159	Reset Effect
	160-199	Null
	200-209	Reset All
	210-211	Gobo Short Cut: Enable
	212-213	Gobo Short Cut: Disable
	214-215	Color Short Cut: Enable
	216-217	Color Short Cut: Disable
	218-229	Null
	230-239	Lamp off
	240-255	Null

09/ Error Information

Error codes are shown continuously in the display when the fixture fails and they will not disappear until the fixture is repaired.

CPU-B/C/D/E/F Error

Check whether the 485 (DATA) leads on the PCB board are installed in place or disconnected.
Check whether the related 485 (DATA) signal circuit on the PCB board is damaged.

Pan Reset Error

Check whether the position of the pan where the magnet is installed falls off or is damaged.
Check whether there are obstacles in the pan operating range.
Check whether the Hall element on the pan is damaged.
Check whether the lead connecting the Hall element on the pan and the PCB board is in poor contact or disconnected.
Check whether the motor on the pan is damaged.
Check whether the related circuit of the motor drive board on the pan is damage.

Pan Encode Error

Check whether the encoder on the pan is damaged.
Check whether the lead connecting the encoder on the pan and the PCB board is in poor contact or disconnected.

Tilt Reset Error

Check whether the position of the tilt where the magnet is installed falls off or is damaged.
Check whether there are obstacles in the tilt operating range.
Check whether the Hall element on the tilt is damaged.
Check whether the lead connecting the Hall element on the tilt and the PCB board is in poor contact or disconnected.
Check whether the motor on the tilt is damaged.
Check whether the related circuit of the motor drive board on the tilt is damage.

Tilt Encode Error

Check whether the encoder on the tilt is damaged.
Check whether the lead connecting the encoder on the tilt and the PCB board is in poor contact or disconnected.

Pan Encode Not Find

Check whether the lead connecting the encoder on the pan and the PCB board is in poor contact or disconnected.

Tilt Encode Not Find

Check whether the lead connecting the encoder on the tilt and the PCB board is in poor contact or disconnected.

Color Reset Error

Check whether the position of the color wheel where the magnet is installed falls off or is damaged.
Check whether there are obstacles in the color wheel operating range.
Check whether the Hall element on the color wheel is damaged.
Check whether the lead connecting the Hall element on the color wheel and the PCB board is in poor contact or disconnected.
Check whether the motor on the color wheel is damaged.
Check whether the related circuit of the motor drive board on the color wheel is damage.

Gobo Reset Error

Check whether the position of the gobo wheel where the magnet is installed falls off or is damaged.
Check whether there are obstacles in the gobo wheel operating range.
Check whether the Hall element on the gobo wheel is damaged.
Check whether the lead connecting the Hall element on the gobo wheel and the PCB board is in poor contact or disconnected.
Check whether the motor on the gobo wheel is damaged.
Check whether the related circuit of the motor drive board on the gobo wheel is damage.

FX Gobo Reset Error

Check whether the position of the FX gobo wheel where the magnet is installed falls off or is damaged.
Check whether there are obstacles in the FX gobo wheel operating range.
Check whether the Hall element on the FX gobo wheel is damaged.
Check whether the lead connecting the Hall element on the FX gobo wheel and the PCB board is in poor contact or disconnected.
Check whether the motor on the FX gobo wheel is damaged.
Check whether the related circuit of the motor drive board on the FX gobo wheel is damage.

Focus Reset Fail

Check whether the position of the focus where the magnet is installed falls off or is damaged.
Check whether there are obstacles in the focus operating range.
Check whether the Hall element on the focus is damaged.
Check whether the lead connecting the Hall element on the focus and the PCB board is in poor contact or disconnected.
Check whether the motor on the focus is damaged.
Check whether the related circuit of the motor drive board on the focus is damage.

6 Prism/8 Prism/24 Prism/48 Prism Reset Fail

Check whether the position of the prism where the magnet is installed falls off or is damaged.
Check whether there are obstacles in the prism operating range.
Check whether the Hall element on the prism is damaged.
Check whether the lead connecting the Hall element on the prism and the PCB board is in poor contact or disconnected.
Check whether the motor on the prism is damaged.
Check whether the related circuit of the motor drive board on the prism is damage.

R-Prism1/2 Reset Fail

Check whether the position of the prism where the magnet is installed falls off or is damaged.
Check whether there are obstacles in the prism operating range.
Check whether the Hall element on the prism is damaged.
Check whether the lead connecting the Hall element on the prism and the PCB board is in poor contact or disconnected.
Check whether the motor on the prism is damaged.
Check whether the related circuit of the motor drive board on the prism is damage.

Frost Reset Error

Check whether the position of the frost where the magnet is installed falls off or is damaged.
Check whether there are obstacles in the frost operating range.
Check whether the Hall element on the frost is damaged.
Check whether the lead connecting the Hall element on the frost and the PCB board is in poor contact or disconnected.
Check whether the motor on the frost is damaged.
Check whether the related circuit of the motor drive board on the frost is damage.

Cyan Reset Error

Check whether the position of the cyan color wheel where the magnet is installed falls off or is damaged.
Check whether there are obstacles in the cyan color wheel operating range.
Check whether the Hall element on the cyan color wheel is damaged.
Check whether the lead connecting the Hall element on the cyan color wheel and the PCB board is in poor contact or disconnected.
Check whether the motor on the cyan color wheel is damaged.
Check whether the related circuit of the motor drive board on the cyan color wheel is damage.

Magenta Reset Error

Check whether the position of the magenta color wheel where the magnet is installed falls off or is damaged.
Check whether there are obstacles in the magenta color wheel operating range.
Check whether the Hall element on the magenta color wheel is damaged.
Check whether the lead connecting the Hall element on the magenta color wheel and the PCB board is in poor contact or disconnected.
Check whether the motor on the magenta color wheel is damaged.
Check whether the related circuit of the motor drive board on the magenta color wheel is damage.

Yellow Reset Error

Check whether the position of the yellow color wheel where the magnet is installed falls off or is damaged.
Check whether there are obstacles in the yellow color wheel operating range.
Check whether the Hall element on the yellow color wheel is damaged.
Check whether the lead connecting the Hall element on the yellow color wheel and the PCB board is in poor contact or disconnected.
Check whether the motor on the yellow color wheel is damaged.
Check whether the related circuit of the motor drive board on the yellow color wheel is damage.

Head Fan 1/2/3/4/5/6/7/8/9 Start Error

Check whether the fan is not running.
Check whether the fan leads are installed in place or disconnected.
Check whether the fan is damaged.
Check whether there are obstacles in the fan operating range.

Base Fan 1/2 Start Error

Check whether the fan is not running.
Check whether the fan leads are installed in place or disconnected.
Check whether the fan is damaged.
Check whether there are obstacles in the fan operating range.

Arm Fan 1/2 Start Error

Check whether the fan is not running.
Check whether the fan leads are installed in place or disconnected.
Check whether the fan is damaged.
Check whether there are obstacles in the fan operating range.

Lamp Hot Power Off

Check whether the temperature switch of the lamp is off.
Check whether the fans are still running properly.

Ballast Comm Err

Check whether the output voltage of the ballast reaches 380V.
Check whether the ballast is damaged.
Check whether the telecommunication lines are installed in place or disconnected.

Lamp On Error

Check whether the bulb or ballast is faulty.

Lamp Over Volte Error

Check if the lamp is damaged.
Check if the lamp has reached its lifetime.
Check if the ballast is damaged.

Ballast Temp. High

Check whether the ambient temperature exceeds 45˚C.
Check if the ballast fan speed is too slow.
Check if the ballast is damaged.

Lamp Temp Error

Check whether the lead connecting the temperature sensor is installed in place or disconnected.

G Sensor Error

Check whether the gravity sensor on board E is damaged.

Base Humidity Error

Check whether the humidity sensor is faulty.
Check whether the lead connecting the humidity sensor is installed in place or disconnected.

Head Humidity Error

Check whether the humidity sensor is faulty.
Check whether the lead connecting the humidity sensor is installed in place or disconnected.

Base Humi. Too High

Disassemble the housing of the fixture to dehumidify.

Head Humi. Too High

Disassemble the housing of the fixture to dehumidify.

Memory Error

When the memory IC keeps reporting errors, please replace the motherboard.

Position of cooling fans:

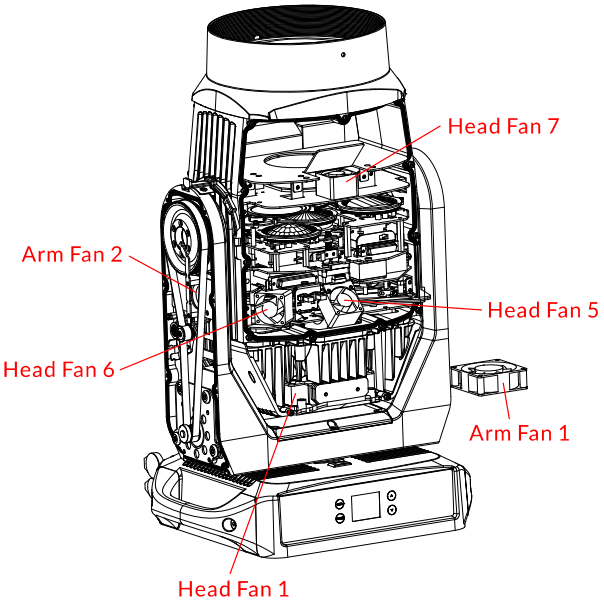

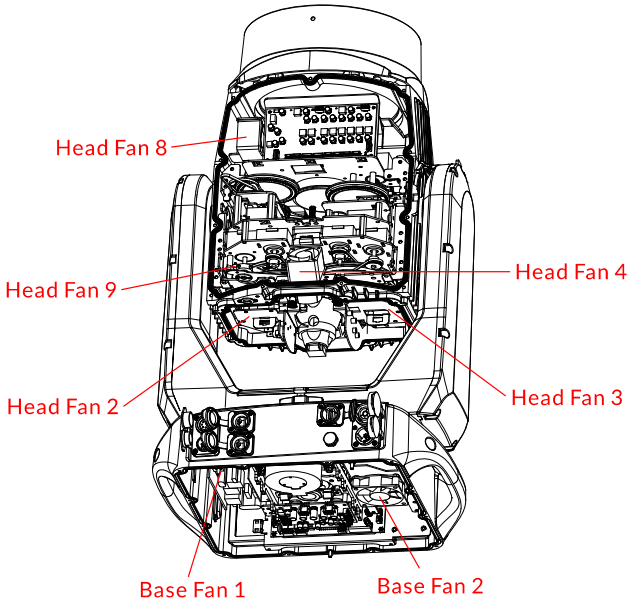

Cooling Fans	Part Number	V	W	Position
Base Fan 1	3014001428	DC 24V	7.2W	Base - A
Base Fan 2	3014001251	DC 24V	3.6W	Base - A
Arm Fan 1	3014001256	DC 24V	4.8W	Base - A
Arm Fan 2	3014001406	DC 24V	2.9W	Base - A
Head Fan 1	3014003026	DC 24V	8.4W	Head - E
Head Fan 2	3014001406	DC 24V	2.9W	Head - E
Head Fan 3				
Head Fan 4	3014001428	DC 24V	7.2W	Head - E
Head Fan 5				
Head Fan 6				
Head Fan 7				
Head Fan 8				
Head Fan 9				

10/ Troubleshooting

Problem	Potential cause(s)	Remedies
Fixture does not respond or appears to be off.	No power to the fixture.	Confirm that the power is switched on and cables are plugged in.
	No output from PSU.	Replace the PSU.
Fixture suddenly turned off.	Power was turned off.	Check the power supply, switches and breakers.
Light output cuts out intermittently.	Fixture is too hot.	Check fixture's stored error messages for more information. Allow fixture to cool. Clean fixture. Reduce ambient temperature.
Fixture suddenly stopped responding.	DMX cables were disconnected.	Inspect DMX cables.
Fixture operates irregularly / abnormal.	Incorrect DMX address or DMX mode.	Inspect and enter the correct DMX address or mode.
	DMX link is not terminated.	Install a XLR 120ohm DMX termination at the end of the DMX link.
	Bad data link.	Replace or repair defective cables and/or connections.
	One of the fixtures is defective and is disturbing data transmission on the link.	Track and isolate the corrupted fixture. Have the fixture serviced by a qualified technician.
Pan / tilt is skipping / shuddering	Pan/ tilt locks are not released.	Release the pan / tilt locks.
	Obstacles are within the required pan / tilt clearance.	Inspect and remove any obstacles constraining free operation of the pan / tilt.
	The Hall element is damaged.	Replace the Hall element.
	The magnetic steel fell out.	Replace the magnetic steel.

11/ Fixture Cleaning

Regular cleaning is very important for fixture life and performance. Buildup of dust, dirt, smoke particles, fog fluid residues, etc. degrades the fixture's light output and cooling ability. Cleaning schedules for lighting fixtures vary greatly depending on the operating environment. It is therefore impossible to specify precise cleaning intervals for the fixture. Environmental factors that may result in a need for frequent cleaning include:

- Use of smoke or fog machines.
- High airflow rates (near air conditioning vents, for example).
- Airborne dust (from stage effects, building structures and fittings or the natural environment at outdoor events, for example).

If one or more of these factors is present, inspect fixtures within their first few hours of operation to see whether cleaning is necessary. Check again at frequent intervals. This procedure will allow you to assess cleaning requirements in your particular situation.

Follow these precautions when cleaning the fixture:

- Work in a clean, dry, well-lit area.
- Use gentle pressure only. A soft lint-free cloth dampened with a solution of water and a mild detergent is recommended, under no circumstances should alcohol, solvents or abrasives be used! Use care when cleaning optical components: surfaces are fragile and easily scratched.

12/ Approvals and Certifications

This product has been tested and found to comply with the following standards:

- 2014/30/EU - Electromagnetic Compatibility (EMC)
- 2014/35/EU - Low Voltage Directive (LVD)
- cETLus Approved (Control #5000057)
- UK SI 2016 No. 1091: Electromagnetic Compatibility Regulations 2016
- UK SI 2016 No. 1101: The Electric Equipment (Safety) Regulations 2016

The information in this document is subject to change without notice.

For the latest information, visit www.acmelighting.com.