Standard

APPLICABLE MODELS

- TORNADO (TB 5 IP)

ORDER CODE

- 63583548 TORNADO (TB 5 IP)

CASE WEIGHT

- 49 kg (108.0 lbs)

MEAS

- 1,220 x 610 x 615 mm (48.0" x 24.0" x 24.2")

LOADING Q'TY

- Two-pack loader case

MAXIMUM STACKING
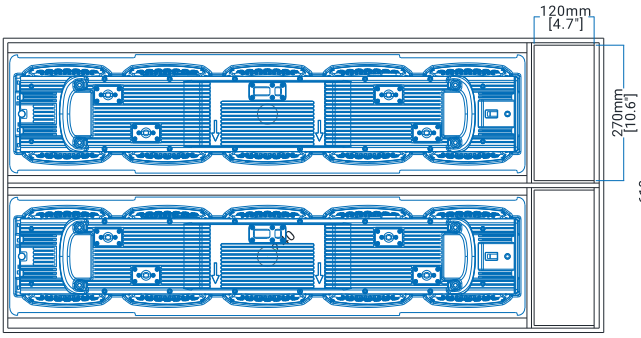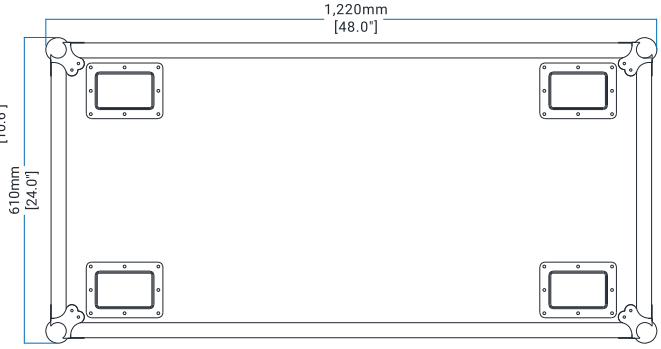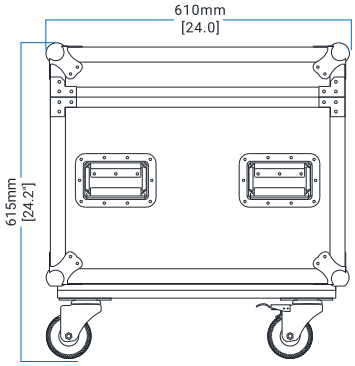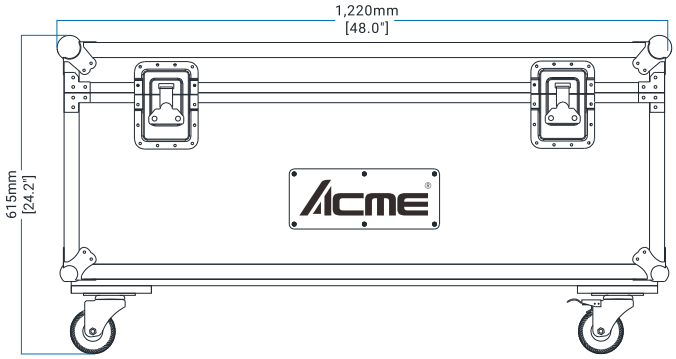
- 2 stacks